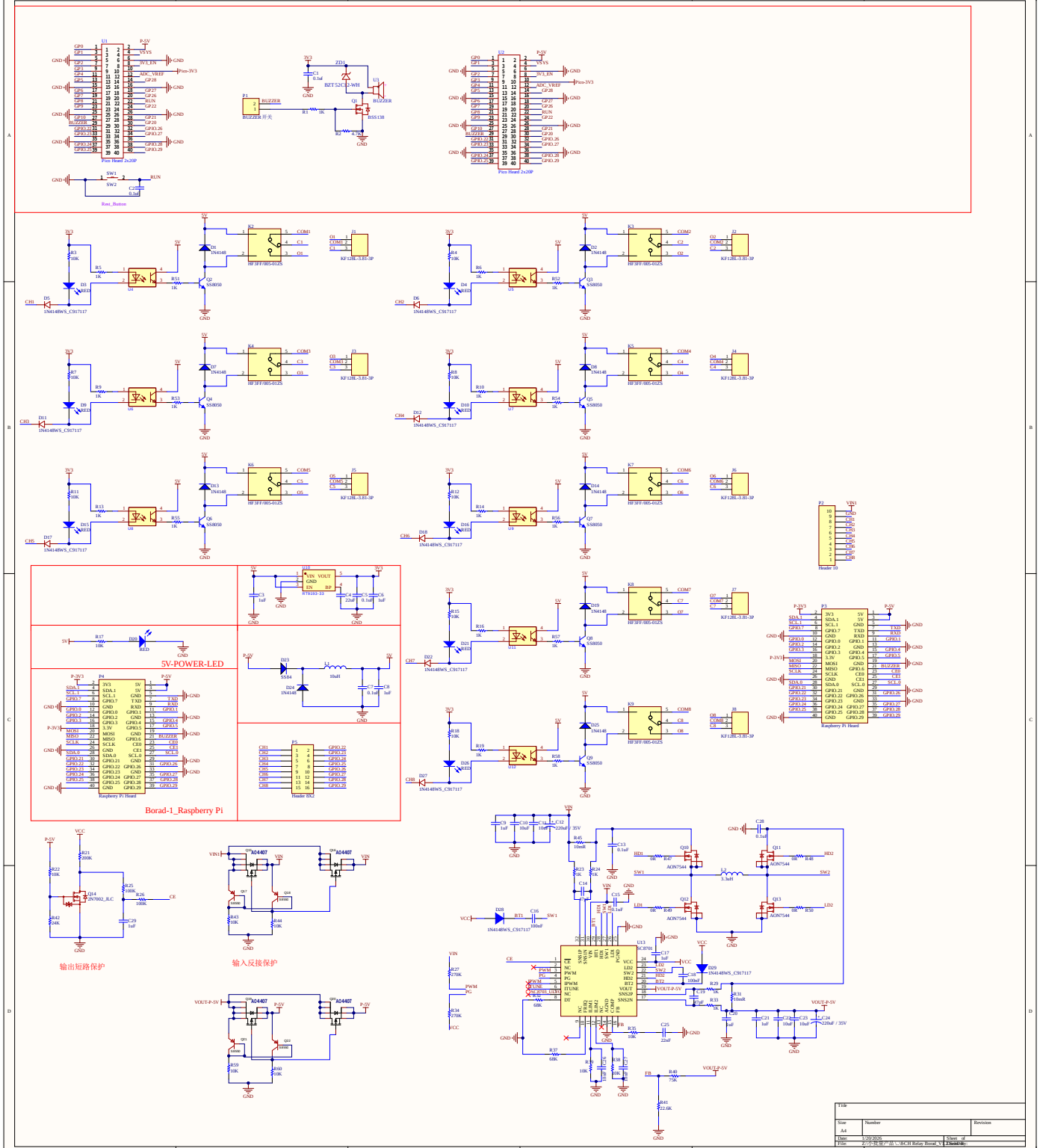

Title		
Size A4	Number	Revision
Date: 1/20/2026	Sheet of	
File: Z:\个人资料\产品\L\8CH Relay Borad_V1.2.kicad_sch	Drawn By:	